HomeTek Technology Inc.

ADDRESS: No. 67-9, Shir Men Road, Tu Cheng City,
Taipei Hsien, Taiwan,
PHONE : 886-2-22608375 FAX : 886-2-22748013
E - mail : hometek@ms15.hinet.net

NVLAP Lab Code:200331-0

EMI TEST REPORT
FOR

APPLICANT	: SMART CABLING & TRANSMISSION CORP.
ADDRESS	: 10F, No. 493, Chung-Cheng Rd., Hsin Tien City, Taipei 231, Taiwan, R. O. C.
EUT	: Video Interference Blocker
MODEL NO.	: CHB00XXXT

MEASUREMENT PROCEDURE USED

AS/NZS CISPR 22: 2004 Information technology equipment – Radio disturbance characteristics – Limits and methods of measurement

PREPARED BY :

HomeTek Technology Inc.

No. 67-9, Shir Men Road, Tu Cheng City,

Taipei Hsien. Taiwan

Report # : AS5F011

TABLE OF CONTENTS

TABLE OF CONTENTS 2
CERTIFICATE 3
GENERAL INFORMATION 4
MODIFICATION LIST 5
CONDUCTED POWER LINE TEST 6
1 TEST INSTRUMENTS & FACILITIES 6
2 TEST PROCEDURE 6
3 TEST SETUP 7
4 CONFIGURATION OF THE EUT 9
5 EUT OPERATING CONDITION 13
6 LIMIT OF CONDUCTED POWER LINE EMISSION CLASS B 13
7 RESULT OF CONDUCTED POWER LINE TEST 13
8 CONDUCTED POWER LINE TEST DATA (PAGE 1) 14
9 CONDUCTED POWER LINE TEST DATA (PAGE 2) 15
10 CONDUCTED POWER LINE TEST DATA (PAGE 3) 16
11 CONDUCTED POWER LINE TEST DATA (PAGE 4) 17
RADIATED EMISSION TEST 18
1 TEST INSTRUMENTS & FACILITIES 18
2 TEST PROCEDURE 19
3 TEST SETUP 19
4 CONFIGURATION OF THE EUT 21
5 EUT OPERATING CONDITION 21
6 LIMIT OF RADIATED EMISSION CLASS B 21
7 RESULT OF RADIATED EMISSION TEST 21
8 RADIATED EMISSION TEST DATA (PAGE 1) 22
9 RADIATED EMISSION TEST DATA (PAGE 2) 23
APPENDIX A
PHOTOS OF TEST CONFIGURATION
APPENDIX B
PHOTOS OF EUT

HomeTek Technology Inc.

ADDRESS: No. 67-9, Shir Men Road, Tu Cheng City, Taipei Hsien, Taiwan
PHONE : 886-2-22608375 FAX : 886-2-22748013
E - mail : hometek@ms15.hinet.net

NVLAP Lab Code:200331-0

CERTIFICATE

APPLICANT	:	SMART CABLING & TRANSMISSION CORP.
ADDRESS	:	10F, No. 493, Chung-Cheng Rd., Hsin Tien City, Taipei 231, Taiwan, R. O. C.
Receipt Date	:	06/15/2006 Final Test Date: 06/26/2006
EUT	:	Video Interference Blocker
MODEL NO.	:	CHB00XXXT

MEASUREMENT PROCEDURE USED :

AS/NZS CISPR 22: 2004 Information technology equipment – Radio disturbance characteristics – Limits and methods of measurement

- THE MAXIMUM EMISSION LEVELS WERE COMPARED TO THE CISPR 22 CLASS B LIMITS BOTH RADIATED AND CONDUCTED EMISSION.
- THE ABOVE DEVICE WAS TESTED BY HOMETEK TECHNOLOGY INC. TO SHOWS THE MAXIMUM EMISSION LEVEL FROM THE DEVICE.
- THIS TEST RESULTS OF THIS REPORT APPLIES TO ABOVE TESTED SAMPLE ONLY.
- THIS TEST REPORT SHALL NOT BE REPRODUCE IN PART WITHOUT WRITTEN APPROVAL OF HOMETEK TECHNOLOGY INC.
- THE REPORT MUST NOT BE USED BY THE CLIENT TO CLAIM PRODUCT ENDORSEMENT BY NVLAP OR ANY AGENCY OF THE U. S. GOVERNMENT.
- THE TEST RESULTS ARE TRACEABLE TO THE NATIONAL OR INTERNATIONAL STANDARD.

APPROVED BY : 6/29/2006

ALAIN LIN / Supervisor

GENERAL INFORMATION

1 APPLICANT : SMART CABLING & TRANSMISSION CORP.

2 ADDRESS : 10F, No. 493, Chung-Cheng Rd.,
Hsin Tien City, Taipei 231, Taiwan, R. O. C.

3 MANUFACTURER : SMART CABLING & TRANSMISSION CORP.

4 ADDRESS : 10F, No. 493, Chung-Cheng Rd.,
Hsin Tien City, Taipei 231, Taiwan, R. O. C.

5 DESCRIPTION OF EUT :

EUT : Video Interference Blocker

Model Number : CHB00XXXT

Serial # : N/A

5.1 The difference between series of models CHB00XXXT are as shown below:

(1) The first “X” represents different system input.
(2) The second “X” represent different accessory.
(3) The third “X” represent different color.

The PCB layout is similar. The worst case of EMI test data were shown in this test report.

6 FEATURES OF EUT :

Please refer to user manual or product specification.

MODIFICATION LIST

THE FOLLOWING ACCESSORIES WERE ADDED TO THE EUT DURING TESTING :

NO MODIFICATION BY HOMETEK TECHNOLOGY INC.

CONDUCTED POWER LINE TEST

1 TEST INSTRUMENTS & FACILITIES

The following test Instruments was used during the conducted test :

Item	Instruments/ Facilities	Specification	Manufacturer	Model # S/N	Date Of Cal.
1	EMI Receiver	9KHz ~ 30MHz	ROHDE & SCHWARZ	ESHS 30 844827/007	FEB/2006
2	LISN (for EUT)	50Ω/50uH/100A 150KHz ~ 30MHz	SCHWARZ BECK	NNLK 8121 8121370	OCT/2005
3	LISN (for Support Unit)	50Ω/50uH/10A 9KHz ~ 30MHz	ROHDE & SCHWARZ	ESH3-Z5 846128/007	MAR/2006
4	Terminator	50Ω	N/A	N/A	NOV/2005
5	Attenuation	50Ω/10dB	Mini-Circuit	NAT-10 AT-002	JUL/2005
6	Cable	5.4m	SUHNER	RG-223 CON2-002	AUG/2005
7	ESXS-K1 (software)	Version 2.03b 9KHz ~ 30MHz	ROHDE & SCHWARZ	1082.9678.02 840.913/246	N/A

Note : Items 1 ~ 6 were calibrated within period of 1 year.

2 TEST PROCEDURE

2.1 The EUT was tested according to **AS/NZS CISPR 22**.

2.2 The EUT was placed 0.4 meter from the conducting wall of shielding room and kept at least 0.8 meter from any other grounded conducting surface.

2.3 The frequency range form 0.15 MHz to 30 MHz was investigated.

2.4 The LISN used was 50 Ohm / 50 uHenry as specified of **AS/NZS CISPR 22**.

2.5 All the support peripherals are connect to the other LISN.

2.6 Cables and peripherals were moved to find the maximum emission levels for each frequency.

3 TEST SETUP

3.1 Typical : Setup Of Conducted Test

ELECTRICAL AND ELECTRONIC EQUIPMENT IN THE RANGE OF 9kHz TO 40 GHz AS/NZS CISPR 22

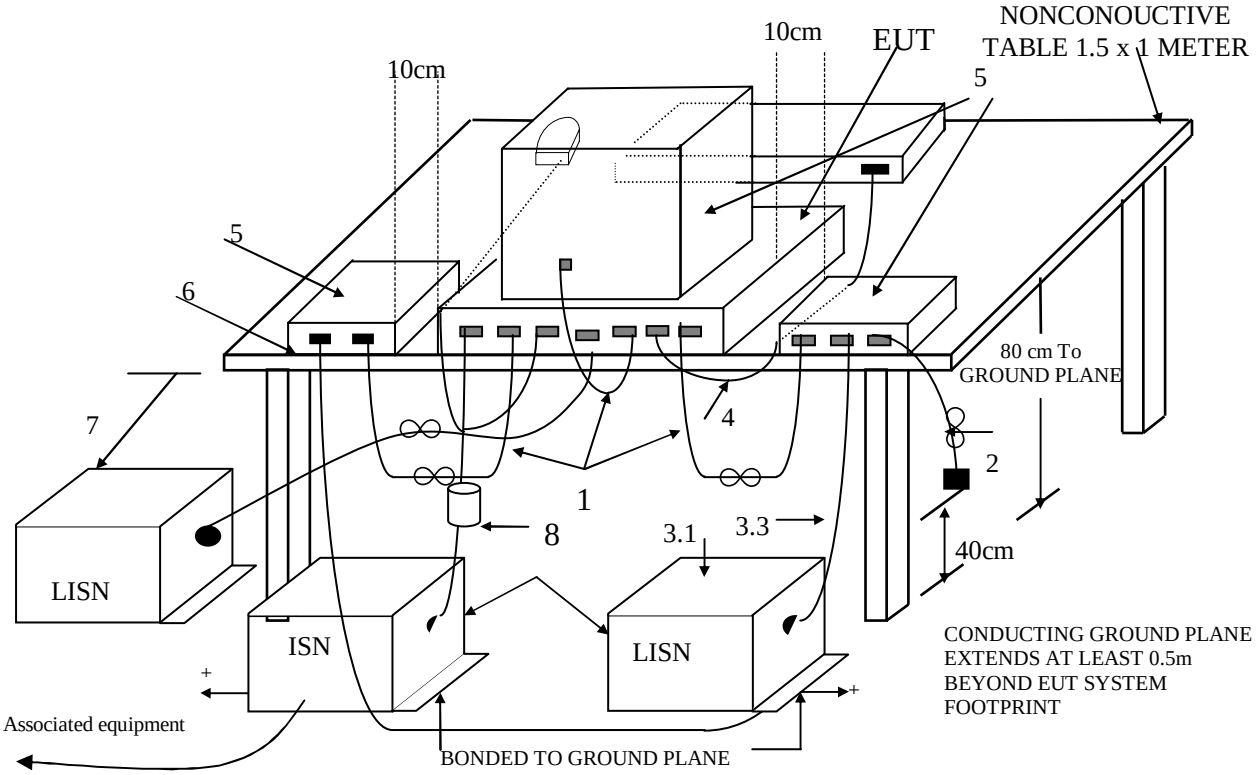

+LISNs may have to be moved to the side to meet 3.3 below.

(Details for setup configuration, please refer to appendix A.)

LEGEND:

1. If cables, which hang closer than 40 cm to the horizontal metal groundplane, cannot be shortened to appropriate length, the excess shall be folded back and forth forming a bundle 30 cm to 40 cm long.
2. Excess mains cord shall be bundled in the centre or shortened to appropriate length.
3. EUT is connected to one artificial mains network (AMN). All AMNs and ISNs may alternatively be connected to a vertical reference plane or metal wall.
   - 3.1 All other units of a system are powered from a second AMN. A multiple outlet strip can be used for multiple mains cords.
   - 3.2 AMN and ISN are 80 cm from the EUT and at least 80 cm from other units and other metal planes.
   - 3.3 Mains cords and signal cables shall be positioned for their entire lengths, as far as possible, at 40 cm from the vertical reference plane.
4. Cables of hand-operated devices, such as keyboards, mouses, etc., have to be placed as close as for normal usage.
5. Peripherals shall be placed at a distance of 10 cm from each other and from the controller, except for the monitor which, if this is an acceptable installation practice, shall be placed directly on the top of the controller.
6. I/O signal cable intended for external connection.
7. The end of the I/O signal cables which are not connected to an AE may be terminated, if required, using correct terminating impedance.
8. If used, the current probe shall be placed at 0.1 m from the ISN.

Test Configuration
Tabletop Equipment Conducted Emission

3.2 Block Diagram Of Conducted Test

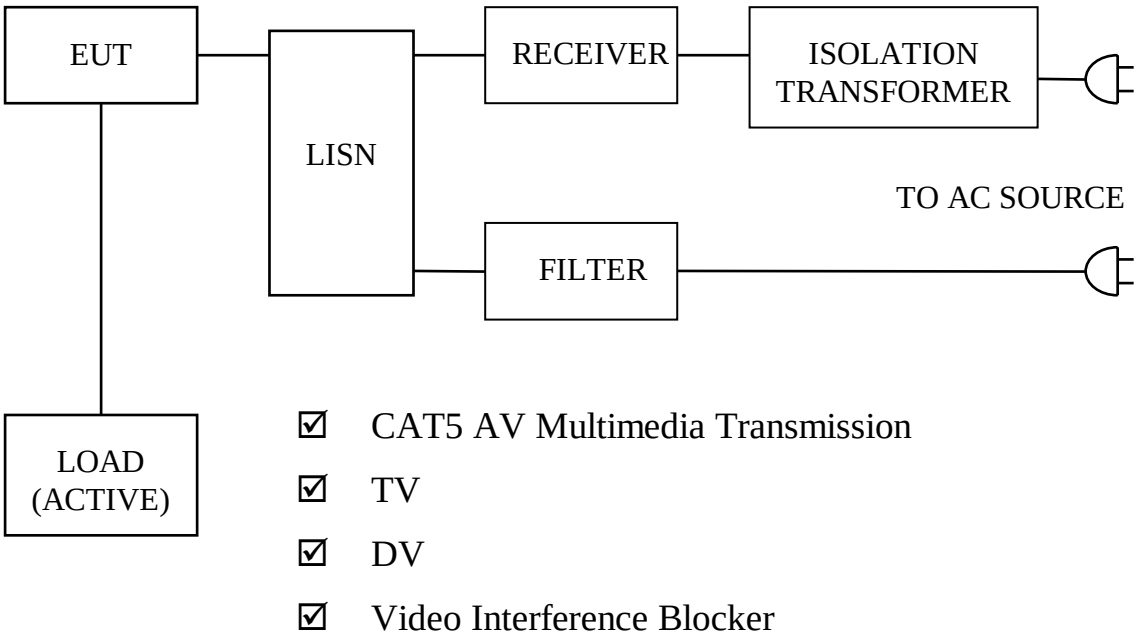

- ☑ CAT5 AV Multimedia Transmission
- ☑ TV
- ☑ DV
- ☑ Video Interference Blocker

4 CONFIGURATION OF THE EUT

The EUT was configured according to **AS/NZS CISPR 22**. All I/O ports were connected to the appropriate peripherals. All peripherals and cables are listed below (including internal device) :

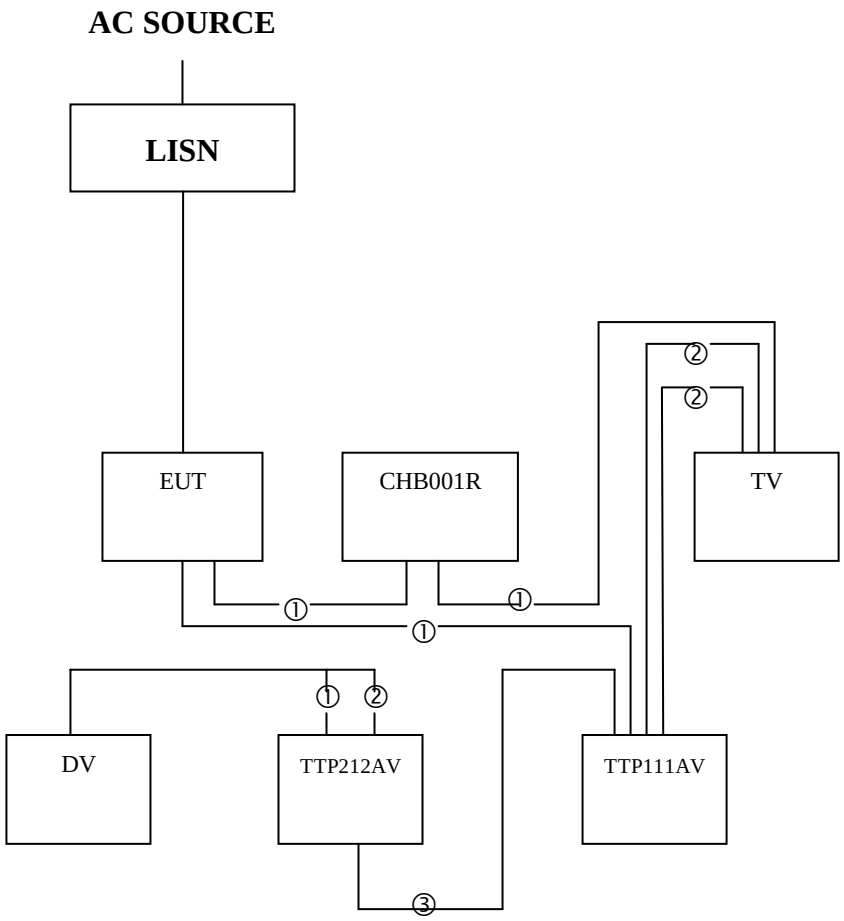

① Video Cable
② Audio Cable
③ RJ-45 Cable

Figure 1

4.1 EUT

EUT Type	:	☐Proto Type ☑Engineer Type ☐Mass Production
Condition when received	:	☑Good ☐Damage : _____
Device	:	Video Interference Blocker
Applicant	:	SMART CABLING & TRANSMISSION CORP.
Manufacturer	:	SMART CABLING & TRANSMISSION CORP.
Model Number	:	CHB00XXXT
Serial Number	:	N/A
FCC ID	:	N/A
Video Input Port	:	Metal Type Connector
Video Output Port	:	Metal Type Connector
Power Cord (AC)	:	2 pin
Power Cord (AC)	:	Un-Shielded, 1.8 m, 2 pin
Power Supply Type	:	Linear Power Adapter

4.2 PERIPHERALS

☑ DV

Manufacturer	:	SONY
Model Number	:	DCR-PC110
Serial Number	:	1158142
FCC ID	:	FCC DoC
Data Cable 1	:	Shielded, 1.8 m, Connect to the Video port
Data Cable 2	:	Shielded, 1.8 m, Connect to the Audio port
Power Cord	:	Un-Shielded, 1.8 m

☑ TV

Manufacturer	:	TCL
Model Number	:	1419A
Serial Number	:	N/A
FCC ID	:	N/A
Data Cable 1	:	Shielded, 1.0 m, Connect to the Video port
Data Cable 2 x 2	:	Shielded, 1.5 m, Connect to the Audio port
Power Cord	:	Un-Shielded, 1.8 m

☑ CAT5 AV Multimedia Transmission 1

Manufacturer	:	SMART CABLING & TRANSMISSION CORP.
Model Number	:	TTP212AV
Serial Number	:	N/A
FCC ID	:	N/A
Data Cable 1	:	Shielded, 1.8 m, Connect to the Video port
Data Cable 2	:	Shielded, 1.8 m, Connect to the Audio port
Data Cable 3	:	Un-Shielded, 1.0 m, Connect to the RJ-45 port
Power Cord	:	N/A

☑ CAT5 AV Multimedia Transmission 2

Manufacturer	:	SMART CABLING & TRANSMISSION CORP.
Model Number	:	TTP111AV
Serial Number	:	N/A
FCC ID	:	N/A
Data Cable 1	:	Shielded, 1.0 m, Connect to the Video port
Data Cable 2 x 2	:	Shielded, 1.5 m, Connect to the Audio port
Data Cable 3	:	Un-Shielded, 1.0 m, Connect to the RJ-45 port
Power Cord	:	N/A

☑ Video Interference Blocker

Manufacturer	:	SMART CABLING & TRANSMISSION CORP.
Model Number	:	CHB001R
Serial Number	:	N/A
FCC ID	:	N/A
Data Cable x 2	:	Un-Shielded, 1.0 m, Connect to the Video port
Power Cord	:	N/A

☑ Power Adapter

Manufacturer	:	YN
Model Number	:	YAA-2400500E
Serial Number	:	N/A
FCC ID	:	N/A
Data Cable	:	N/A
Power Cord	:	Un-Shielded, 1.8 m

4.3 REMARK : N/A

5 EUT OPERATING CONDITION

5.1 The operation frequency of the EUT is none.

5.2 Configure the EUT according to the **AS/NZS CISPR 22**.

5.3

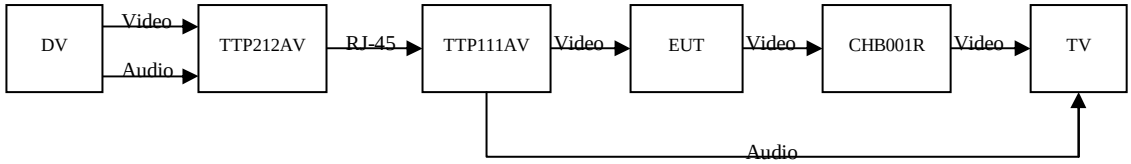

5.4 TV receivers DV's video signal (color bar) through EUT, CHB001R, TTP111AV, TTP212AV via video cable or RJ-45 cable.

5.5 TV receivers DV's audio signal (1KHz audio) through TTP111AV and TTP212AV via audio cable or RJ-45 cable.

5.6 TV display color bar and measure the emission noise.

5.7 The photos of conducted test configuration, please refer to appendix A.

6 LIMIT OF CONDUCTED POWER LINE EMISSION CLASS B

AS/NZS CISPR 22

Frequency Range	Quasi Peak	Average
0.15 ~ 0.5 MHz	66 - 56 dBuV	56 - 46 dBuV
0.5 ~ 5 MHz	56 dBuV	46 dBuV
5 ~ 30 MHz	60 dBuV	50 dBuV

6.1 In the above table, the tighter limit applies at the band edges.

7 RESULT OF CONDUCTED POWER LINE TEST

7.1 The frequency range from 0.15 MHz to 30 MHz was investigated. All readings are quasi-peak values and average.

7.2 IF bandwidth : 9 kHz, Meas Time : 1 sec.

7.3 Temperature : 28 ℃, Humidity : 56 % RH.

7.4 Uncertainty in conducted emission measurement : ± 2.90dB.

7.5 The conducted test result were gained by following procedures :
Level = Reading Level + Insertion Loss of LISN + Cable Loss
(All calculation were done by ESHS30 EMI test receiver.)

7.6 Result : **PASSED**

8 CONDUCTED POWER LINE TEST DATA (PAGE 1)

HomeTek EMC LAB. TEL :886-2-22608375 24 Jun 2006 10:15

CONDUCTED EMISSIONS

EUT:	Video Interference Blocker
Manuf:	5F011
Op Cond:	LINE 1
Operator:	Makoto
Test Spec:	FOR CISPR22 CLASS B
Comment:	240V/50Hz
	CHB001T
Result File:	5f01111g.dat : CHB001T

Prescan Measurement:	Detectors:	X PK / + AV
	Meas Time:	see scan settings
	Subranges:	16
	Acc Margin:	55 dB

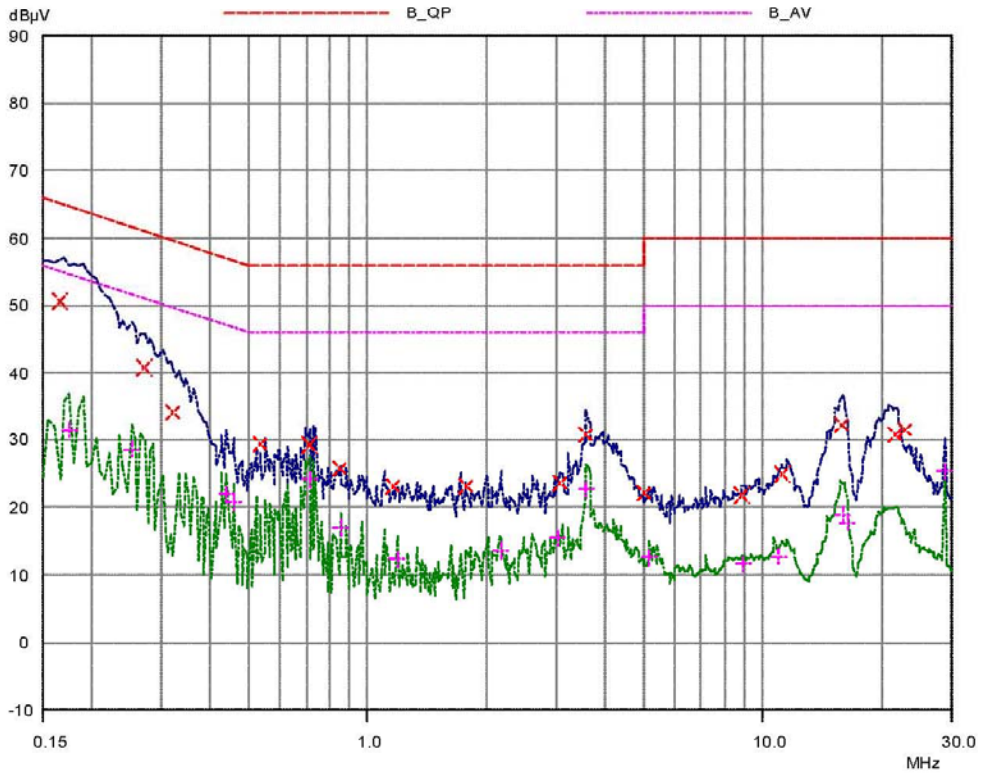

9 CONDUCTED POWER LINE TEST DATA (PAGE 2)

HomeTek EMC LAB. TEL :886-2-22608375 24 Jun 2006 10:15

CONDUCTED EMISSIONS

EUT:	Video Interference Blocker
Manuf:	5F011
Op Cond:	LINE 1
Operator:	Makoto
Test Spec:	FOR CISPR22 CLASS B
Comment:	240V/50Hz
	CHB001T
Result File:	5f01111g.dat : CHB001T

Prescan Measurement:	Detectors:	X PK / + AV
	Meas Time:	see scan settings
	Subranges:	16
	Acc Margin:	55 dB

Peak Search Results

Frequency MHz	PK Level dBµV	PK Limit dBµV	PK Delta dB
0.165	50.66	65.21	14.55
0.27	40.78	61.12	20.34
0.32	34.24	59.71	25.47
0.535	29.34	56.00	26.66
0.71	29.24	56.00	26.76
0.849	25.70	56.00	30.30
1.164	23.09	56.00	32.91
1.78	23.20	56.00	32.80
3.068	23.54	56.00	32.46
3.565	30.92	56.00	25.08
5.02	22.19	60.00	37.81
8.8	21.79	60.00	38.21
11.17	24.93	60.00	35.07
15.84	32.19	60.00	27.81
21.6	30.85	60.00	29.15
23.0	31.57	60.00	28.43

Frequency MHz	AV Level dBµV	AV Limit dBµV	AV Delta dB
0.175	31.44	54.72	23.28
0.25	28.64	51.76	23.12
0.44	21.94	47.06	25.12
0.455	20.79	46.78	25.99
0.71	24.12	46.00	21.88
0.849	17.01	46.00	28.99
1.178	12.35	46.00	33.65
2.172	13.62	46.00	32.38
3.005	15.45	46.00	30.55
3.565	22.65	46.00	23.35
5.16	12.63	50.00	37.37
8.89	11.68	50.00	38.32
11.01	12.75	50.00	37.25
15.84	19.00	50.00	31.00
16.30999	17.74	50.00	32.26
28.64	25.33	50.00	24.67

* limit exceeded

10 CONDUCTED POWER LINE TEST DATA (PAGE 3)

HomeTek EMC LAB. TEL :886-2-22608375 24 Jun 2006 10:20

CONDUCTED EMISSIONS

EUT:	Video Interference Blocker
Manuf:	5F011
Op Cond:	LINE 2
Operator:	Makoto
Test Spec:	FOR CISPR22 CLASS B
Comment:	240V/50Hz
	CHB001T
Result File:	5f01121g.dat : CHB001T

Prescan Measurement:	Detectors:	X PK / + AV
	Meas Time:	see scan settings
	Subranges:	16
	Acc Margin:	55 dB

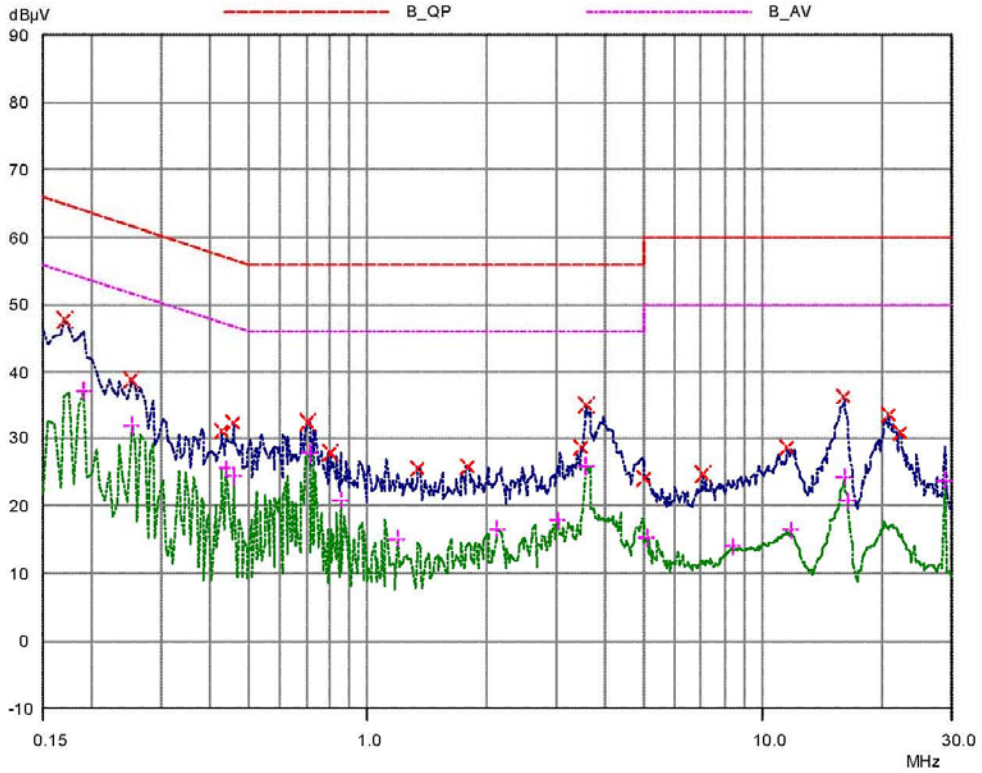

11 CONDUCTED POWER LINE TEST DATA (PAGE 4)

HomeTek EMC LAB. TEL :886-2-22608375 24 Jun 2006 10:20

CONDUCTED EMISSIONS

EUT:	Video Interference Blocker
Manuf:	5F011
Op Cond:	LINE 2
Operator:	Makoto
Test Spec:	FOR CISPR22 CLASS B
Comment:	240V/50Hz
	CHB001T
Result File:	5f01121g.dat : CHB001T

Prescan Measurement:	Detectors:	X PK / + AV
	Meas Time:	see scan settings
	Subranges:	16
	Acc Margin:	55 dB

Peak Search Results

Frequency MHz	PK Level dBµV	PK Limit dBµV	PK Delta dB
0.17	47.75	64.96	17.21
0.25	38.88	61.76	22.88
0.425	31.09	57.35	26.26
0.455	32.30	56.78	24.48
0.705	32.38	56.00	23.62
0.8	27.83	56.00	28.17
1.339	25.56	56.00	30.44
1.794	25.84	56.00	30.16
3.46	28.57	56.00	27.43
3.565	35.01	56.00	20.99
5.02	24.10	60.00	35.90
7.05	24.70	60.00	35.30
11.47	28.66	60.00	31.34
16.02	36.26	60.00	23.74
20.78	33.44	60.00	26.56
22.3	30.76	60.00	29.24

Frequency MHz	AV Level dBµV	AV Limit dBµV	AV Delta dB
0.19	37.25	54.04	16.79
0.25	31.92	51.76	19.84
0.44	25.56	47.06	21.50
0.455	24.43	46.78	22.35
0.71	27.81	46.00	18.19
0.849	20.90	46.00	25.10
1.178	15.13	46.00	30.87
2.123	16.55	46.00	29.45
3.005	17.86	46.00	28.14
3.565	25.90	46.00	20.10
5.05	15.33	50.00	34.67
8.31	14.05	50.00	35.95
11.69	16.44	50.00	33.56
15.99	24.25	50.00	25.75
16.30999	20.79	50.00	29.21
28.64	23.77	50.00	26.23

* limit exceeded

RADIATED EMISSION TEST

1 TEST INSTRUMENTS & FACILITIES

The following test Instruments was used during the radiated emission test :

Item	Instruments /facilities	Specification	Manufacturer	Model # / S/N#	Date of Cal.
1	OPEN AREA TEST SITE	☑ OATS 3			JUL/2005
2	EMI TEST RECEIVER	20Hz ~ 26.5GHz	ROHDE & SCHWARZ	ESMI 845442/006	FEB/2006
3	PRE-AMPLIFIER	9KHz ~ 3000MHz	ADVANTEST	BB525C 90081001	OCT/2005
4	ANTENNA (BI-LOG)	25MHz ~ 2GHz	SCHAFFNER	CBL6112B S/N : 2614	JUN/2006
5	Attenuation	50Ω/6dB	JYE BAO	FAT-N (M-F) 001	JUL/2005
6	Ferrite Clamp	30 ~ 1000MHz	ADT	FC18 910030	DEC/2005
7	Ferrite Clamp	30 ~ 1000MHz	HomeTek	HFC 001	DEC/2005
8	Cable	10m	SUHNER	RG214/U OS3-003	DEC/2005
9	Cable	14m	BELDEN	9913 OS3-001	DEC/2005
10	EMI 32 (software)	N/A	AUDIX	19991013-0923	N/A

Note : Items 1 ~ 9 were calibrated within period of 1 year.

2 TEST PROCEDURE

2.1 The EUT was test according to **AS/NZS CISPR 22**.

2.2 The radiated test was performed at HomeTek Lab's Open Site III.

2.3 The frequency range from 30 MHz to 1 GHz, the measurement were made at 10 meters, with a BI-log antenna.

3 TEST SETUP

3.1 TEST SETUP OF OPEN SITE.

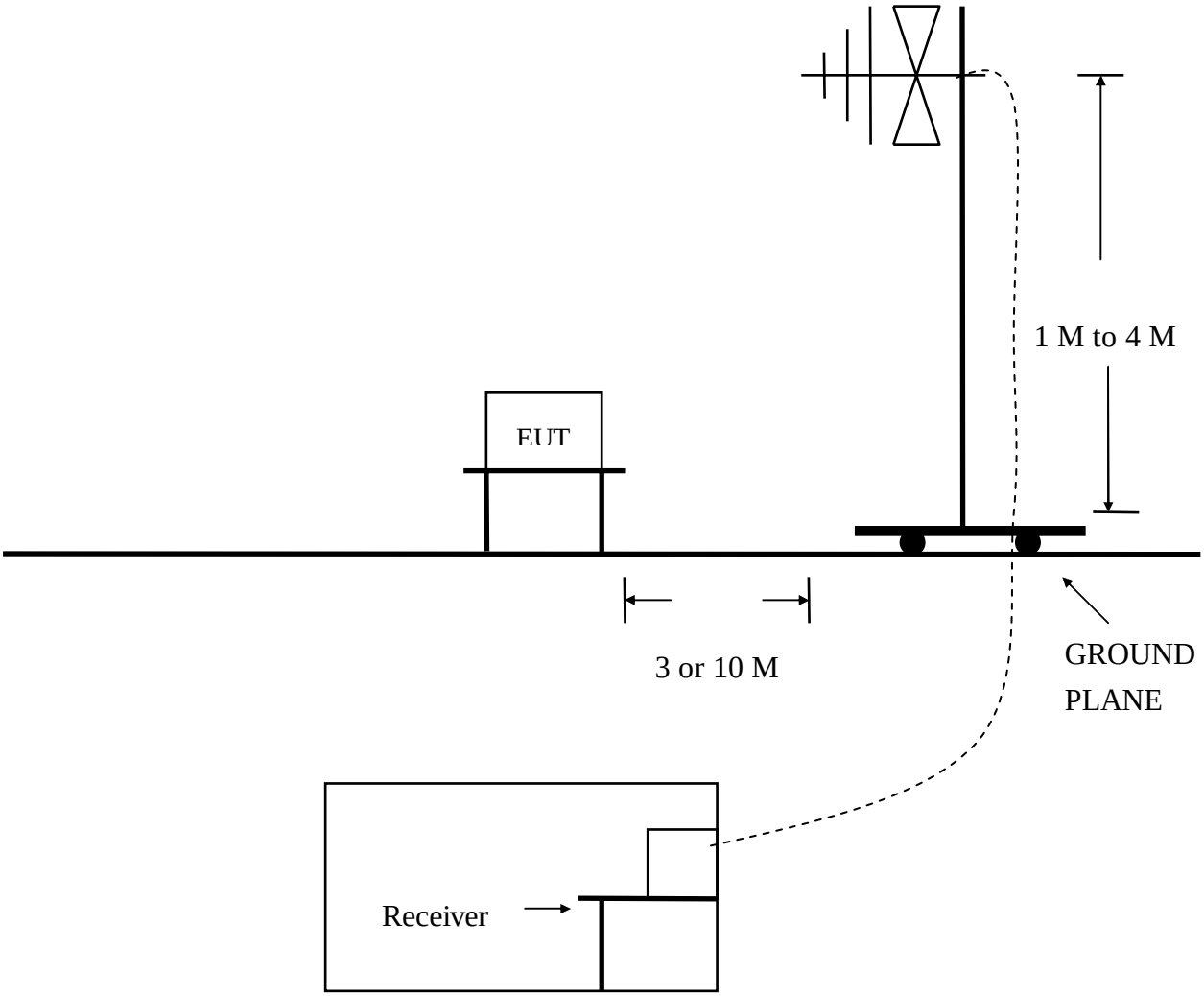

3.2 TEST SETUP OF EUT

ELECTRICAL AND ELECTRONIC EQUIPMENT IN THE RANGE OF 9kHz TO 40 GHz AS NZS CISPR 22

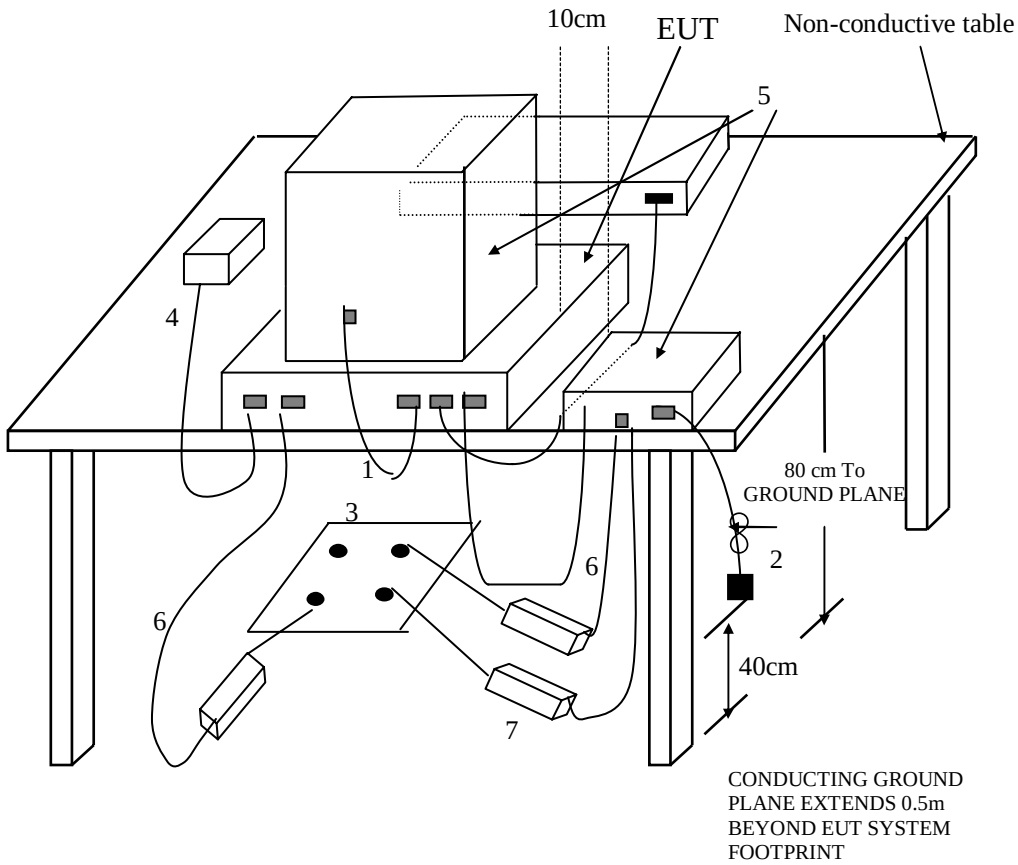

(Details for setup configuration, please refer to appendix A.)

LEGEND:

1. If cables, which hang closer than 40 cm to the horizontal metal ground plane cannot be shortened to the appropriate length, the excess shall be folded back and forth forming a bundle 30 m to 40 cm long.
2. The end of I/O signal cables which are not connected to a peripheral may be terminated, if required for proper operation using correct terminating impedance.
3. Mains junction box(es) shall be flush with, and bonded directly to , the metal ground plane.
   NOTE if used, the AMN shall be installed under the horizontal metal ground plane.
4. Cables of hand-operated devices such as keyboards, mouses, etc. shall be placed as for normal usage.
5. Peripherals shall be placed at a distance of 10 cm from each other and from the controller, except for the monitor which, if for an acceptable installation practice, shall be placed directly on top of the controller.
6. Mains cables, telephone lines or other connections to auxiliary equipment located outside the test area shall drape to the floor, be fitted with ferrite clamps or ferrite tubes placed on the floor at the point where the cable reaches the floor and then routed to the place where they leave the turntable. No extension cords shall be used to mains receptacle.
7. Ferrite clamps or ferrite tubes with similar characteristics (as defined in 10.4). No more than one cable per clamp.

Test Configuration
Tabletop Equipment Radiated Emission

4 CONFIGURATION OF THE EUT

Same as "Conducted Power Line test", section 5

5 EUT OPERATING CONDITION

5.1 Same as "Conducted Power Line test", section 5

5.2 The radiated emission in the frequency range from 30 MHz - 1000 MHz was test in a horizontal and vertical polarization at HomeTek Lab's open site III.

5.3 The photos of radiated test configuration, please refer to appendix A.

6 LIMIT OF RADIATED EMISSION CLASS B

AS/NZS CISPR 22

Frequency (MHz)	Measurement Distance	Limit (dBuV/m)
30 - 230	10 (M)	30
230 - 1000	10 (M)	37

6.1 The tighter limit shall apply at the edge between two frequency bands.

6.2 Measurement distance in meters between the measuring instrument antenna and the closed point of any part of the EUT or peripherals.

7 RESULT OF RADIATED EMISSION TEST

7.1 The frequency range from 30 MHz to 1 GHz was investigated.

7.2 All readings below or equal 1 GHz are quasi-peak or peak values with resolution bandwidth of 120 KHz.

7.3 The measurements were made at 10 meters of HomeTek Lab's open site III.

7.4 Temperature : 31 ℃, Humidity : 51 % RH.

7.5 Uncertainty in radiated emission measurement : ± 4.18dB.

7.6 The radiated emission result were gained by the following method :

Level = Reading Level + Probe Factor (Antenna Factor) + Cable Loss – Preamp Factor

Over Limit = Level – Limit Line

7.7 Result : **PASSED**

8 RADIATED EMISSION TEST DATA (PAGE 1)

HomeTek Technology Inc.

No 67-9,Shi-Men Rd;,Tu-Chen City,
Taipei County, Taiwan R.O.C.
Tel:02-22608375
Fax:02-22748013

Data#: 4 File#: 5F011.EMI Date: 2006-06-26 Time: 19:54:44

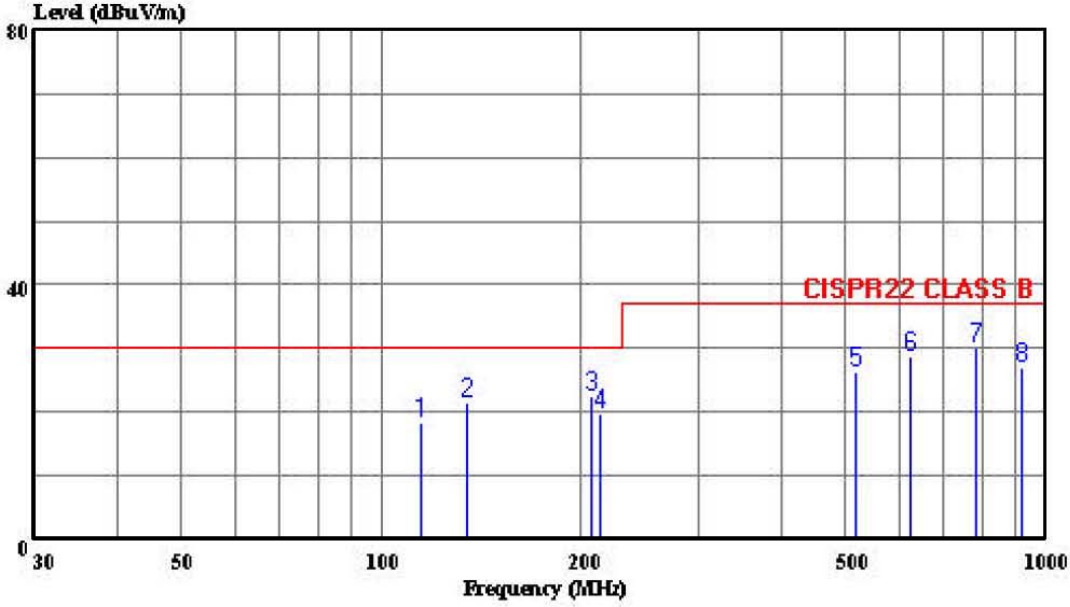

Trace: Ref Trace:

Condition: CISPR22 CLASS B 10m CHASE 2614 060506 HORIZONTAL
eut : Video Interference Blocker
power: 240V/50Hz
memo : CHB001T

Page: 1

	Freq	Level	Limit Line	Over Limit	Read Level	Antenna Factor	Cable Loss	Preamp Factor	Remark
	MHz	dBuV/m	dBuV/m	dB	dBuV	dB/m	dB	dB	
1	114.993	18.18	30.00	-11.82	30.23	12.25	1.46	25.76	Peak
2	134.000	21.52	30.00	-8.48	34.21	11.46	1.58	25.72	Peak
3	206.480	22.44	30.00	-7.56	36.95	9.10	2.01	25.62	Peak
4	214.000	19.86	30.00	-10.14	34.33	9.10	2.04	25.61	Peak
5	518.553	26.45	37.00	-10.55	30.07	17.87	3.41	24.89	Peak
6	627.627	28.82	37.00	-8.18	30.65	18.77	3.81	24.40	Peak
7	782.573	30.01	37.00	-6.99	29.89	19.70	4.26	23.84	Peak
8	917.280	26.93	37.00	-10.07	24.65	20.50	5.15	23.36	Peak

9 RADIATED EMISSION TEST DATA (PAGE 2)

HomeTek Technology Inc.

No 67-9,Shi-Men Rd;,Tu-Chen City,
Taipei County, Taiwan R.O.C.
Tel:02-22608375
Fax:02-22748013

Data#: 3 File#: 5F011.EMI Date: 2006-06-26 Time: 19:01:52

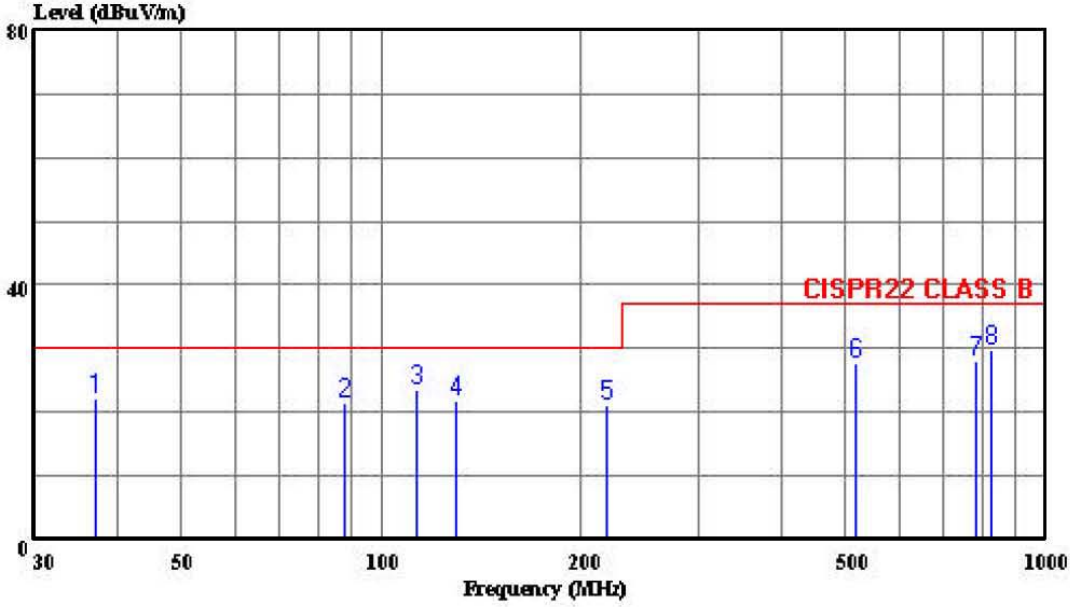

Trace: Ref Trace:

Condition: CISPR22 CLASS B 10m CHASE 2614 060506 VERTICAL
eut : Video Interference Blocker
power: 240V/50Hz
memo : CHB001T

Page: 1

	Freq	Level	Limit Line	Over Limit	Read Level	Antenna Factor	Cable Loss	Preamp Factor	Remark
	MHz	dBuV/m	dBuV/m	dB	dBuV	dB/m	dB	dB	
1	37.000	22.18	30.00	-7.82	31.70	15.62	0.82	25.96	Peak
2	88.000	21.31	30.00	-8.69	37.21	8.65	1.27	25.82	Peak
3	113.000	23.60	30.00	-6.40	35.73	12.18	1.45	25.76	Peak
4	129.313	21.90	30.00	-8.10	34.54	11.54	1.55	25.73	Peak
5	219.000	21.25	30.00	-8.75	35.63	9.17	2.06	25.60	Peak
6	515.680	27.67	37.00	-9.33	31.42	17.76	3.39	24.91	Peak
7	782.033	27.99	37.00	-9.01	27.87	19.70	4.26	23.84	Peak
8	827.687	29.61	37.00	-7.39	28.79	20.04	4.51	23.72	Peak

Appendix A

PHOTOS OF TEST CONFIGURATION

PHOTO OF CONDUCTED POWER LINE TEST

Model : CHB001T

Front View

Rear View

PHOTO OF RADIATED EMISSION TEST

Model : CHB001T

Front View

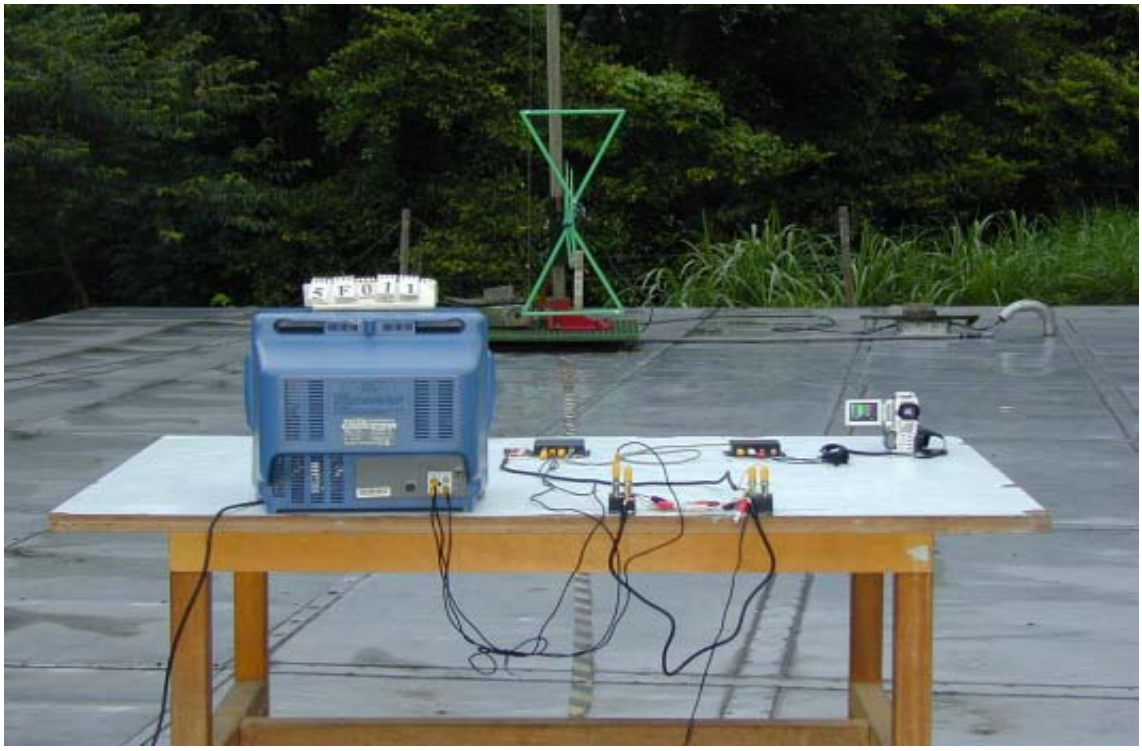

Rear View

Appendix B

PHOTOS OF EUT

PHOTO OF EUT

Model : CHB001T

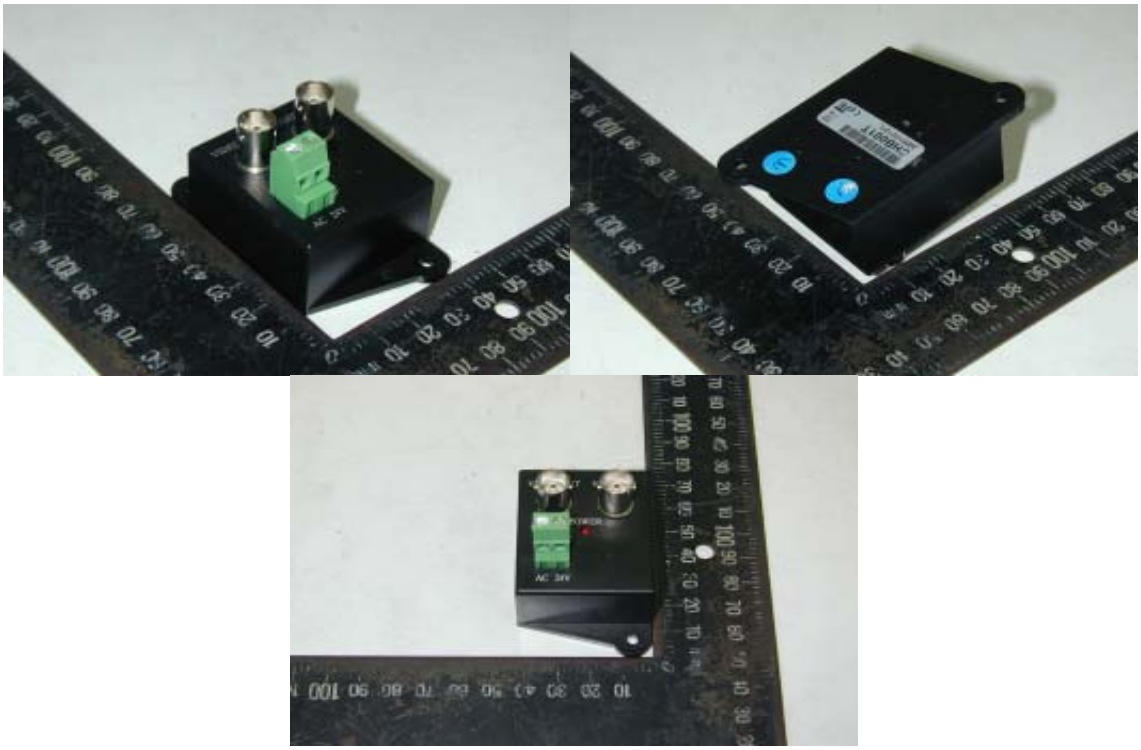

Full View of EUT

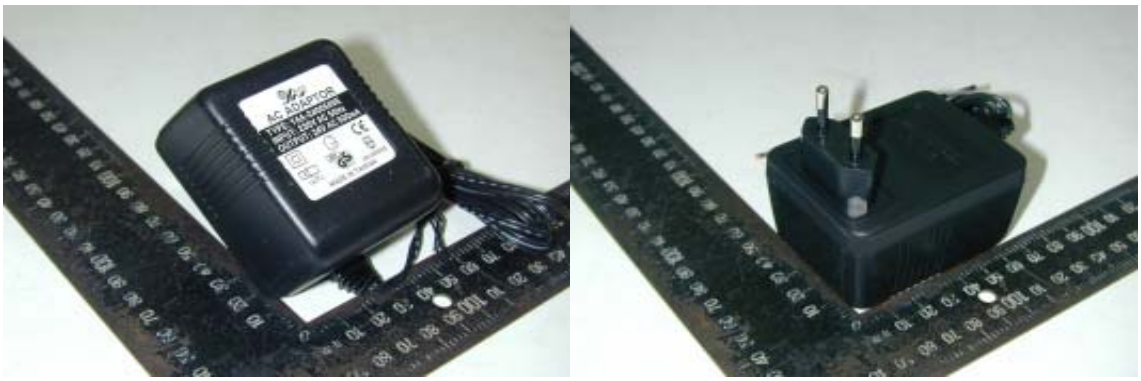

Full View of Adaptor

Declaration of Conformity

Responsible Party Name :

Address :

Phone No :

Fax No :

Declares under our sole responsibility that the product

Product Name : Video Interference Blocker

Model No. : CHB00XXXT

to which this declaration relates is in conformity with the following standards or other normative documents

AS/NZS CISPR 22 (2004) : Electromagnetic Interference
– Limits and Methods of Measurement of Information Technology Equipment

Representative Person's Name : _____

Signature : _____

Date : _____

United States Department of Commerce
National Institute of Standards and Technology

NVLAP®

Certificate of Accreditation to ISO/IEC 17025:1999

NVLAP LAB CODE: 200331-0

HomeTek Technology Inc.

Taipei Shien 236
TAIWAN

is recognized by the National Voluntary Laboratory Accreditation Program for conformance with criteria set forth in NIST Handbook 150:2001 and all requirements of ISO/IEC Guide 17025:1999.
Accreditation is granted for specific services, listed on the Scope of Accreditation, for:

ELECTROMAGNETIC COMPATIBILITY AND TELECOMMUNICATIONS

2005-10-01 through 2006-09-30

Effective dates

DEPARTMENT OF COMMERCE ★ UNITED STATES OF AMERICA ★

For the National Institute of Standards and Technology

NVLAP-01C (REV. 2005-05-19)

National Voluntary
Laboratory Accreditation Program

SCOPE OF ACCREDITATION TO ISO/IEC 17025:1999

HomeTek Technology Inc.
P.O Box: 13-131, Pan-Chiao City
No. 67-9 Shir Men Rd., Tu Chen City
Taipei Shien 236
TAIWAN
Mr. Grant Huang
Phone: 886-2-22608375 Fax: 886-2-22748013
E-Mail: hometek@ms15.hinet.net

ELECTROMAGNETIC COMPATIBILITY AND TELECOMMUNICATIONS **NVLAP LAB CODE 200331-0**

NVLAP Code	*Designation / Description*
Emissions Test Methods:	
12/CIS14a	EN 55014-1 (1993), A1 (1997), A2 (1999):
12/CIS14a2	BS EN 55014-1 (2001) with A1 and A2: Electromagnetic compatibility - Requriements for household appliances, electric tools and similar apparatus - Part 1: Emission
12/CIS14b1	AS/NZS CISPR 14-1 (2003): Electromagnetic Compatibility - Requirements for household appliances, electric tools and similar apparatus - Part 1: Emission
12/CIS14c	CNS 13783-1: Electromagnetic Compatibility Requirements for household appliances, electric tools and similar apparatus - Part 1: Emissions
12/CIS14d	IEC/CISPR 14-1 (2001) and A1 (2001): Electromagnetic Compatibility - Requirements for household appliances, electric tools and similar apparatus - Part 1: Emissions
12/CIS14x	IEC/CISPR 14-1, Ed. 4 (2003): Electromagnetic Compatibility - Requirements for household appliances, electric tools and similar apparatus - Part 1: Emission
12/CIS22	IEC/CISPR 22 (1997) & EN 55022 (1998) + A1(2000): Limits and methods of measurement of radio disturbance characteristics of information technology equipment
12/CIS22a	IEC/CISPR 22 (1993) and EN 55022 (1994): Limits and methods of measurement of radio disturbance characteristics of information technology equipment, Amendment 1 (1995) and Amendment 2 (1996)

2005-10-01 through 2006-09-30
Effective dates

For the National Institute of Standards and Technology

ELECTROMAGNETIC COMPATIBILITY AND TELECOMMUNICATIONS

NVLAP LAB CODE 200331-0

NVLAP Code	*Designation / Description*
12/CIS22b	CNS 13438 (1997): Limits and Methods of Measurement of Radio Interference Characteristics of Information Technology Equipment
12/CIS22c	IEC/CISPR 22, Fourth Edition (2003-04) & EN 55022 (1998): Information technology equipment - Radio disturbance characteristics - Limits and methods of measurement
12/FCC15b	ANSI C63.4 (2003) with FCC Method 47 CFR Part 15, Subpart B: Unintentional Radiators
12/T51a	AS/NZS CISPR 22 (2004): Information technology equipment - Radio disturbance characteristics - Limits and methods of measurement
12/VCCIa	VCCI: Agreement of Voluntary Control Council for Interference by Information Technology Equipment - Technical Requirements: V-3/2004.04

2005-10-01 through 2006-09-30

Effective dates

For the National Institute of Standards and Technology